Outdoor

Outdoor tap 150-300mm

Article no.:	899806425
Finish:	Midnight black
Series:	Outdoor
EAN no.:	5708516855385



Standard features:

Installer friendly design
Ceramic Valves
Designed For Nordic Climate
Wall Thickness 150-300mm
Easy_Operation
Integrated Installation
Comes with matching screws

Product features

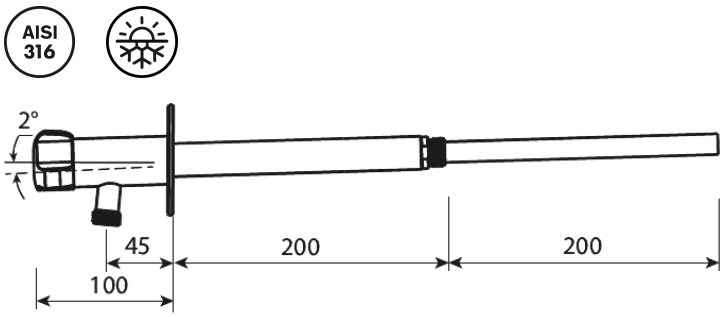

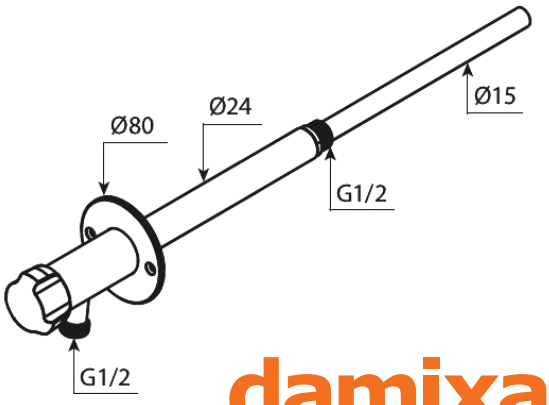

FM Mattsson Denmark ApS
Hvidkærvej 48, 5250 Odense SV, DK-56416218

+45 88 33 00 34 danmark@fmmattssongroup.com

Mere information på damixa.com

damixa