Outdoor

Wall-mounted outdoor shower hot/cold 150-300mm

Article no.:	897816425
Finish:	Midnight black
Series:	Outdoor
EAN no.:	5708516855286



Standard features:

Adjustable Height
Installer friendly design
Hot/Cold Water Connection
Comfortable Flow At Low Pressure
Shower Head 150mm
Ceramic Valves
Designed For Nordic Climate
Wall Thickness 150-300mm
Integrated Installation
Comes with matching screws

Product features



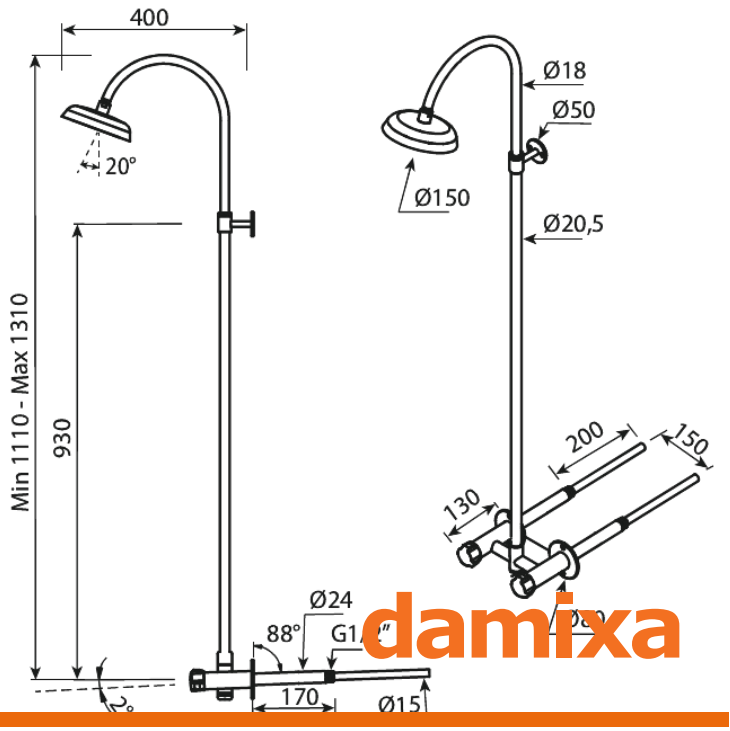

FM Mattsson Denmark ApS
Hvidkærvej 48, 5250 Odense SV, DK-56416218

+45 88 33 00 34 danmark@fmmattssongroup.com

Mere information på damixa.com