Outdoor

# Wall-mounted outdoor shower hot/cold 150-300mm

| | |
|---|---|
| **Article no.:** | 897814725 |
| **Finish:** | Cloudy steel |
| **Series:** | Outdoor |
| **EAN no.:** | 5708516855279 |

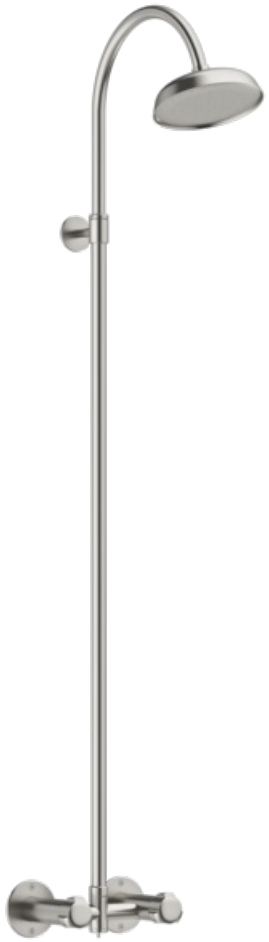

**Standard features:**

Adjustable Height
Installer friendly design
Hot/Cold Water Connection
Comfortable Flow At Low Pressure
Shower Head 150mm
Ceramic Valves
Designed For Nordic Climate
Wall Thickness 150-300mm
Integrated Installation
Comes with matching screws

**Product features**




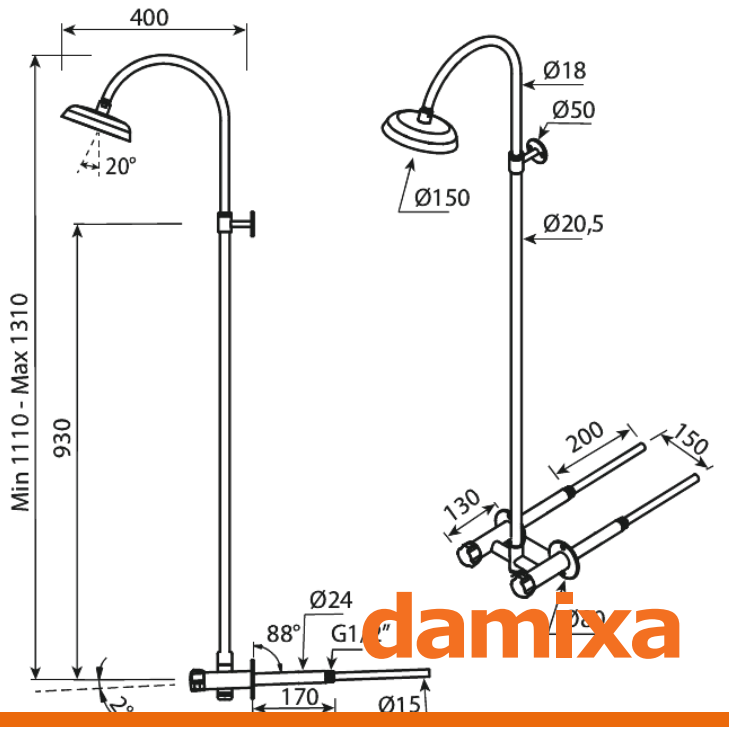


**FM Mattsson Denmark ApS**
Hvidkærvej 48, 5250 Odense SV, DK-56416218

+45 88 33 00 34 danmark@fmmattssongroup.com

Mere information på damixa.com