Pine

Kitchen Mixer

Article no.:	170660000	**EAN no.:**	5708516814696
Finish:	Chrome		
Series:	Pine		

Standard features:

1 handle
120° swivel limitation
Ceramic cartridge
Cold-start
Rub-Clean
Scalding protection
Water consumption max. 8 l/min
Eco-Save water saving feature

Product features

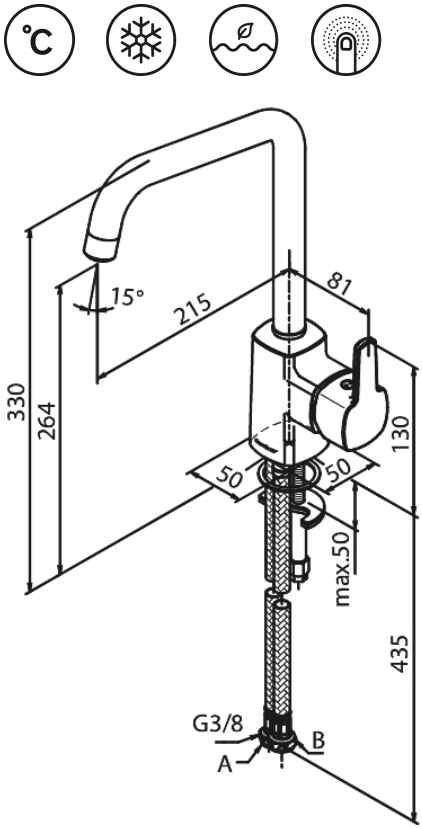

FM Mattsson Denmark ApS
Hvidkærvej 48, 5250 Odense SV, DK-56416218

+45 88 33 00 34 danmark@fmmattssongroup.com

Mere information på damixa.com

damixa