Iris

TMC Shower 1/2" down, 160 CC W/O Rosettes

Article no.:	914756100
Finish:	Matt black
Series:	Iris
EAN no.:	5708516855033



Standard features:

160 cc

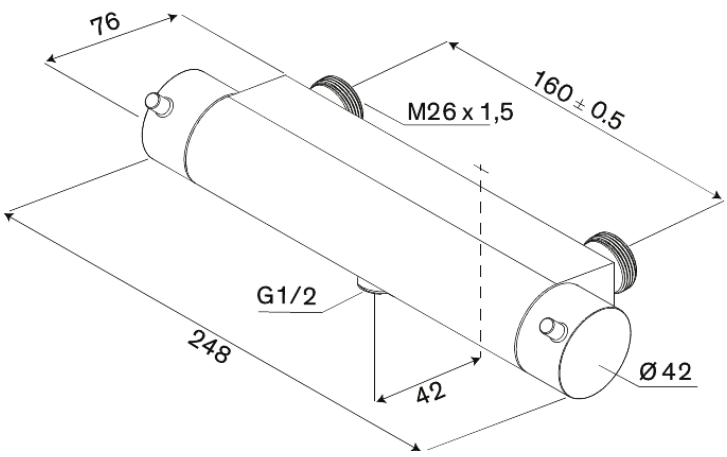

FM Mattsson Denmark ApS
Hvidkærvej 48, 5250 Odense SV, DK-56416218

+45 88 33 00 34 danmark@fmmattssongroup.com

Mere information på damixa.com

damixa