Silhouet

Thermostatic Shower Mixer

Article no.:	744008835	**EAN no.:**	5708516854487
Finish:	Brushed Bronze		
Series:	Silhouet		

Standard features:

Ceramic cartridge
Standard 150mm centres
With 3/4" wall plates & eccentric unions
1/2" connection for hand shower hose

Product features

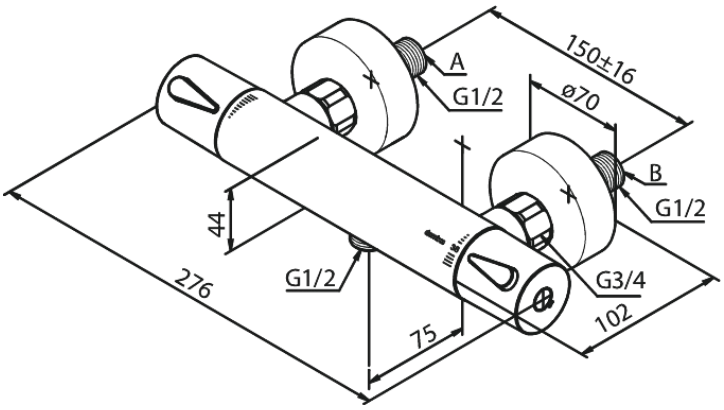

FM Mattsson Denmark ApS
Hvidkærvej 48, 5250 Odense SV, DK-56416218

+45 88 33 00 34 danmark@fmmattssongroup.com

Mere information på damixa.com

damixa