Silhouet

Silhouet XR 2

Article no.:	570468800	**EAN no.:**	5708516854074
Finish:	Brushed Bronze		
Series:	Silhouet		

Standard features:

Cover plate and handle in metal
Including head shower, hand shower and hose
Head Shower max. 9 l/m / Hand Shower max. 9 l/m
Build-in depth (min. 75mm - max. 105mm)

Product features

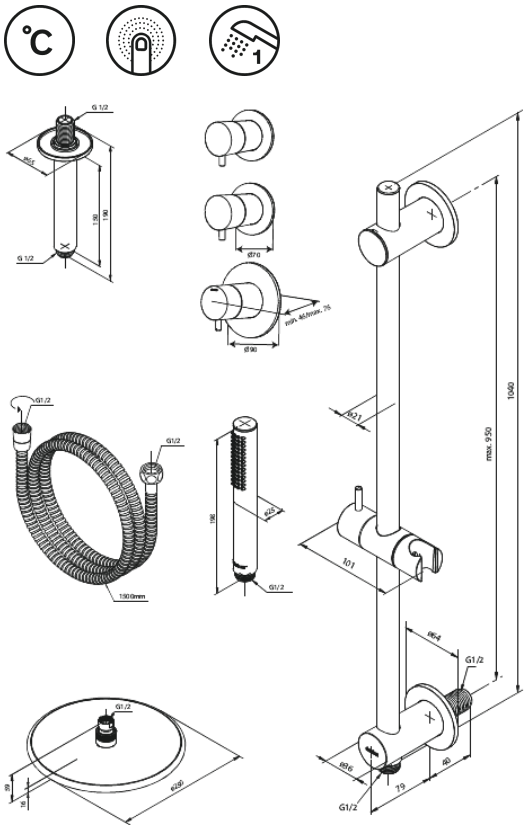

FM Mattsson Denmark ApS
Hvidkærvej 48, 5250 Odense SV, DK-56416218

+45 88 33 00 34 danmark@fmmattssongroup.com

Mere information på damixa.com

damixa