Stop Valve

Article no.:	487574600
Finish:	Steel
Series:	
EAN no.:	5708516852940



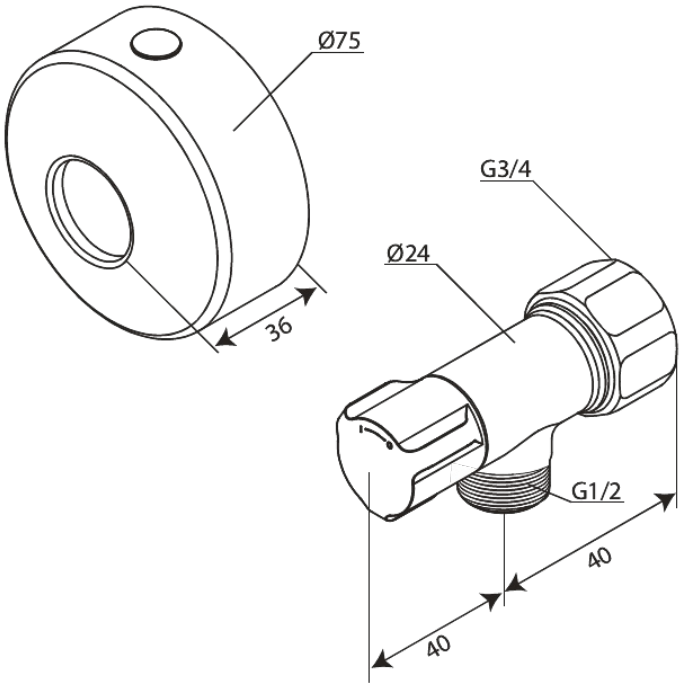

FM Mattsson Denmark ApS
Hvidkærvej 48, 5250 Odense SV, DK-56416218

+45 88 33 00 34 danmark@fmmattssongroup.com

Mere information på damixa.com

damixa