Iris

XR 2

Article no.:	570708700	**EAN no.:**	5708516851523
Finish:	Brushed Copper		
Series:	Iris		

Standard features:

Cover plate and handle in metal
1500 mm shower hose
Head shower 30 cm
Hand shower with 3 spray modes
Shower arm ceiling mounted 15 cm
Shower rail with integrated outlet and holder
Flexible fastening in top of the rail
Head shower 8 l/m / Hand shower 6 l/m

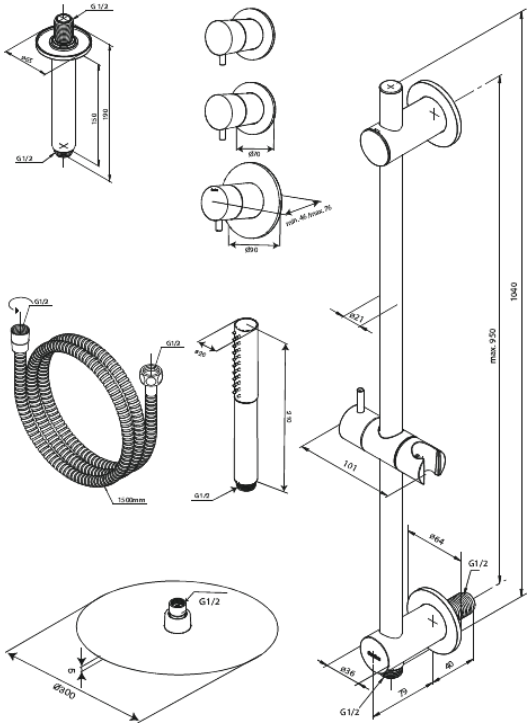

FM Mattsson Denmark ApS
Hvidkærvej 48, 5250 Odense SV, DK-56416218

+45 88 33 00 34 danmark@fmmattssongroup.com

Mere information på damixa.com

damixa