Iris

Kitchen mixer with pull-out spray

Article no.:	911200035	**EAN no.:**	5708516850687
Finish:	Chrome		
Series:	Iris		

Standard features:

120° swivel limitation
Ceramic cartridge
Cold-start
Water consumption max.6 l/min

Product features

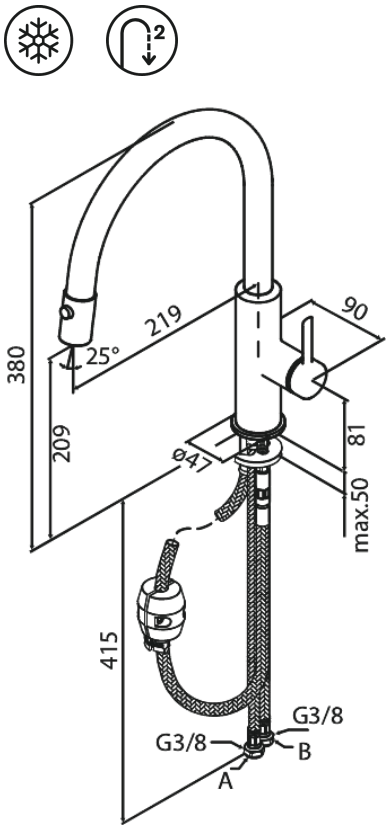

FM Mattsson Denmark ApS
Hvidkærvej 48, 5250 Odense SV, DK-56416218

+45 88 33 00 34 danmark@fmmattssongroup.com

Mere information på damixa.com

damixa