Hand Shower Holder Flex

Article no.:	487545500
Finish:	Graphite Grey
Series:	
EAN no.:	5708516850540



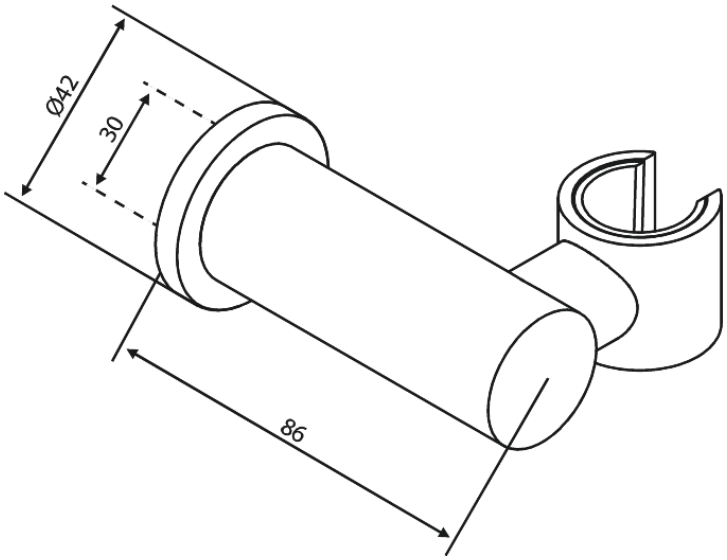

FM Mattsson Denmark ApS
Hvidkærvej 48, 5250 Odense SV, DK-56416218

+45 88 33 00 34 danmark@fmmattssongroup.com

Mere information på damixa.com

damixa