Space

Kitchen Mixer

Article no.:	100000000
Finish:	Chrome
Series:	Space
EAN no.:	5708516615088



Standard features:

1 handle
120° swivel limitation
Ceramic cartridge
Scalding protection
Water consumption max. 13 l
Eco-Save water saving feature
Noise class I

Product features

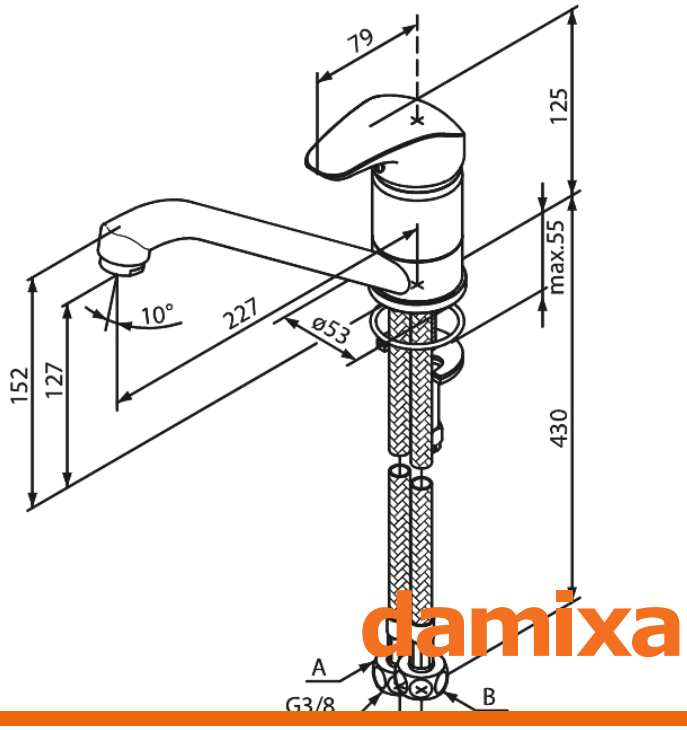

FM Mattsson Denmark ApS
Hvidkærvej 48, 5250 Odense SV, DK-56416218

+45 88 33 00 34 danmark@fmmattssongroup.com

Mere information på damixa.com