Zen

Drawer handle 320 cc

Article no.:	487525500
Finish:	Graphite Grey
Series:	Zen
EAN no.:	5708516848912



Standard features:

Includes mounting screws

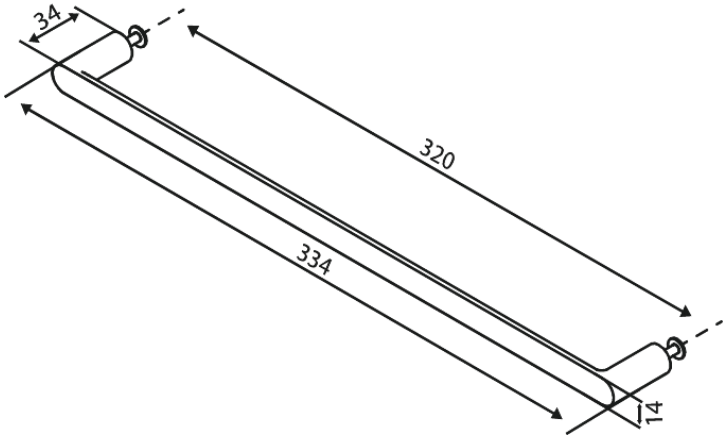

FM Mattsson Denmark ApS
Hvidkærvej 48, 5250 Odense SV, DK-56416218

+45 88 33 00 34 danmark@fmmattssongroup.com

Mere information på damixa.com

damixa