Zen

Spare toilet roll holder

Article no.:	487375500
Finish:	Graphite Grey
Series:	Zen
EAN no.:	5708516848424

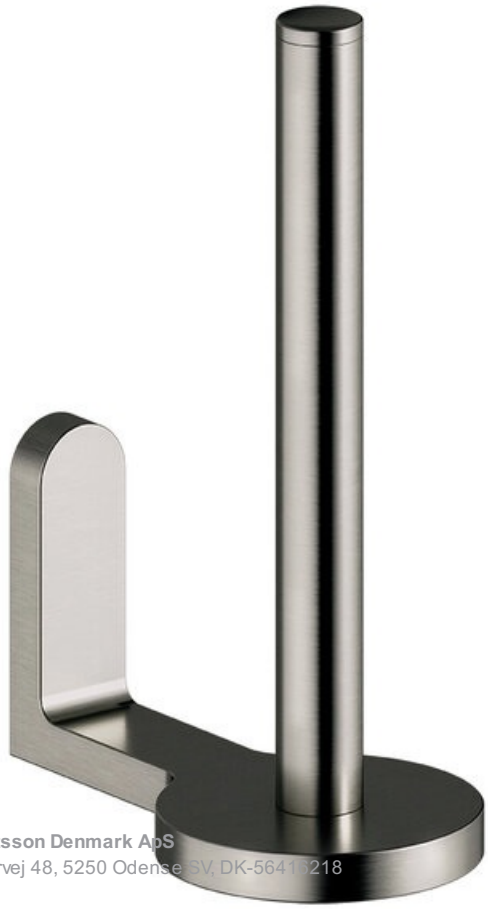

Standard features:

Flexible installation – adhesive or screws

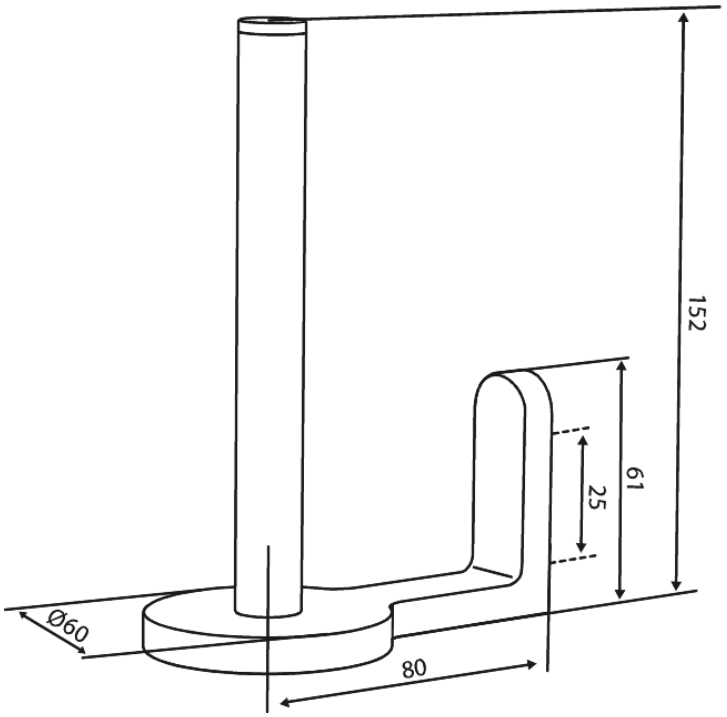

FM Mattsson Denmark ApS
Hvidkærvej 48, 5250 Odense SV, DK-56415218

+45 88 33 00 34 danmark@fmmattssongroup.com

Mere information på damixa.com

damixa