Slate

3 Shower System

Article no.:	579247400	**EAN no.:**	5708516812517
Finish:	Chrome/Black		
Series:	Slate		

Standard features:

Rub-Clean
Scalding protection
Head Shower max. 17 l/m / Hand Shower max. 9 l/m
Adjustable Height
1750 mm metal hose
Integrated diverter
Non Ceramic Headpart
Standard 150mm centres
Eco-Click water saving feature
With 3/4" wall plates & eccentric unions

Product features

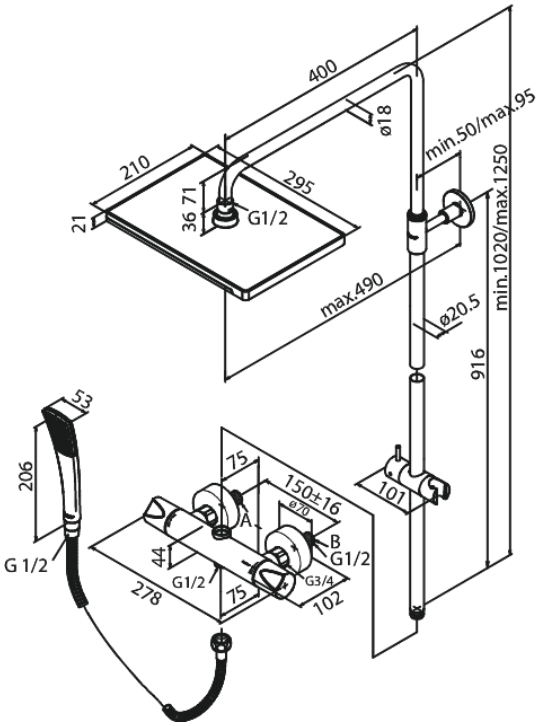

FM Mattsson Denmark ApS
Hvidkærvej 48, 5250 Odense SV, DK-56416218

+45 88 33 00 34 danmark@fmmattssongroup.com

Mere information på damixa.com

damixa