Pine

Thermixa 700 Thermostatic Bath/Shower Mixer

Article no.:	575070000	**EAN no.:**	5708516821625
Finish:	Chrome		
Series:	Pine		

Standard features:

Ceramic cartridge
Water consumption max.23/13 l/min
Standard 150mm centres
With 3/4" wall plates & eccentric unions
1/2" connection for hand shower hose

Product features

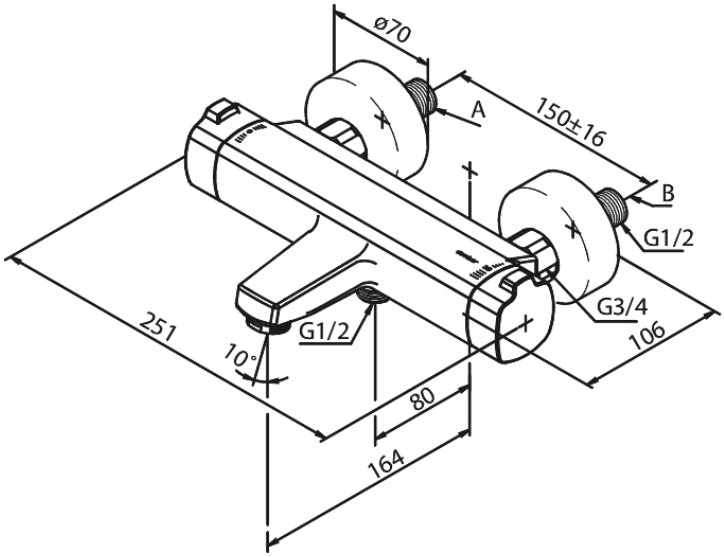

FM Mattsson Denmark ApS
Hvidkærvej 48, 5250 Odense SV, DK-56416218

+45 88 33 00 34 danmark@fmmattssongroup.com

Mere information på damixa.com

damixa