Merkur

Thermixa 100 Thermostatic Bath/Shower Mixer

Article no.:	574910000
Finish:	Chrome
Series:	Merkur
EAN no.:	5708516809937



Standard features:

Ceramic cartridge
Scalding protection
Noise class I
Spouts to be ordered separately
1/2" water inlet
3/4" water inlet
Standard 150mm centres
Eco-Click water saving feature

Product features

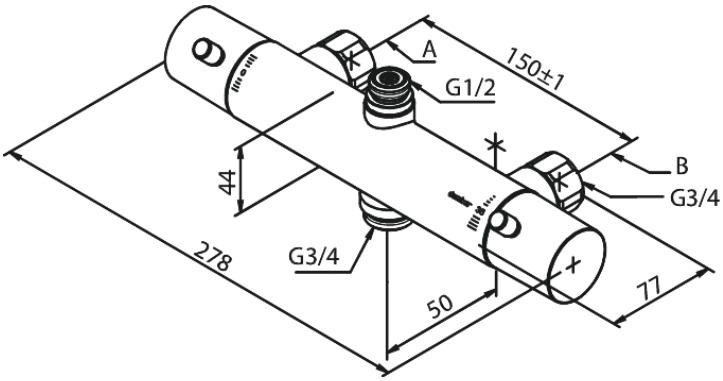

FM Mattsson Denmark ApS
Hvidkærvej 48, 5250 Odense SV, DK-56416218

+45 88 33 00 34 danmark@fmmattssongroup.com

Mere information på damixa.com

damixa