Fixing plate

Article no.:	484240000	**EAN no.:**	5708516805823
Finish:	Chrome		
Series:			

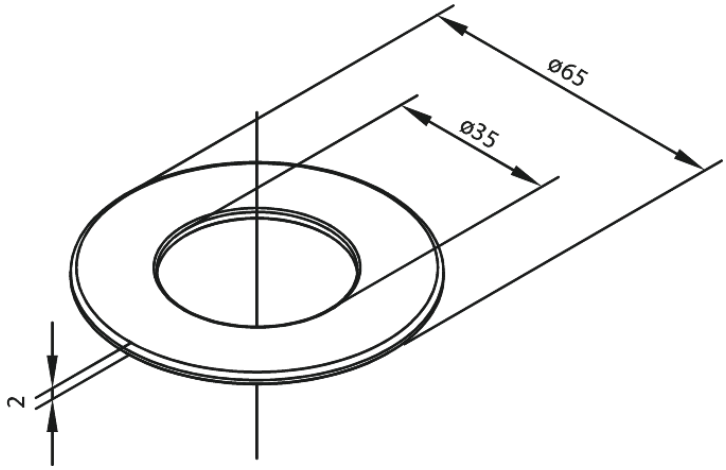

FM Mattsson Denmark ApS
Hvidkærvej 48, 5250 Odense SV, DK-56416218

+45 88 33 00 34 danmark@fmmattssongroup.com

Mere information på damixa.com

damixa