Silhouet

Silhouet BS 2 - concealed bath set with spout

Article no.:	570527700
Finish:	Polished Brass
Series:	Silhouet
EAN no.:	5708516841906



Standard features:

Ceramic cartridge
Water consumption max.9 l/min
Check valves
Build-in depth (min. 75mm - max. 105mm)
Bath spout 18 cm

Product features



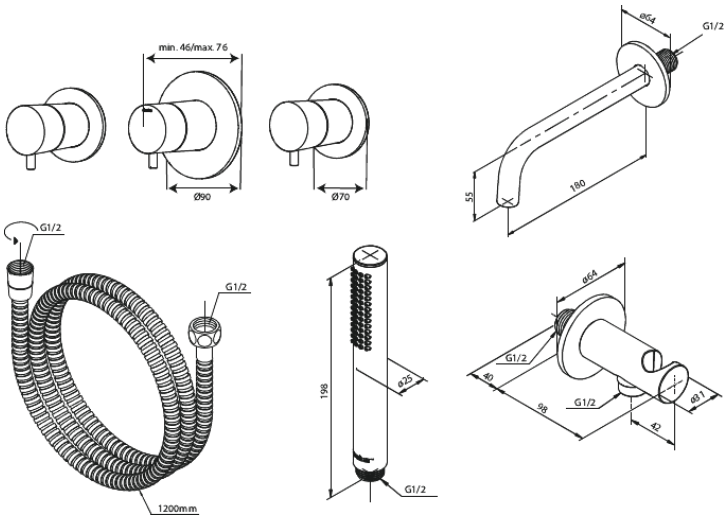

FM Mattsson Denmark ApS
Hvidkærvej 48, 5250 Odense SV, DK-56416218

+45 88 33 00 34 danmark@fmmattssongroup.com

Mere information på damixa.com

damixa