Silhouet

Silhouet XR 1

Article no.:	570475500	**EAN no.:**	5708516841364
Finish:	Graphite Grey		
Series:	Silhouet		

Standard features:

Cover plate and handle in metal
Head Shower max. 9 l/m / Hand Shower max. 9 l/m
Build-in depth (min. 75mm - max. 105mm)

Product features

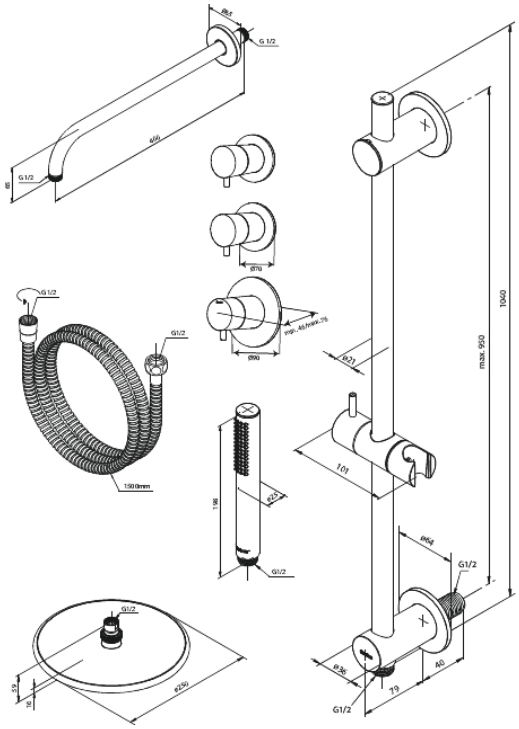

FM Mattsson Denmark ApS
Hvidkærvej 48, 5250 Odense SV, DK-56416218

+45 88 33 00 34 danmark@fmmattssongroup.com

Mere information på damixa.com

damixa