Silhouet

XS 1 built-in shower system, trim set

Article no.:	570458700
Finish:	Brushed Copper
Series:	Silhouet
EAN no.:	5708516841258





Standard features:

Ceramic cartridge
Cover plate and handle in metal
Including head shower, hand shower and hose
Build-in depth (min. 75mm - max. 105mm)
Head shower max. 8 l/min / Hand shower max. 8 l/min (at 300 kPa)

Product features



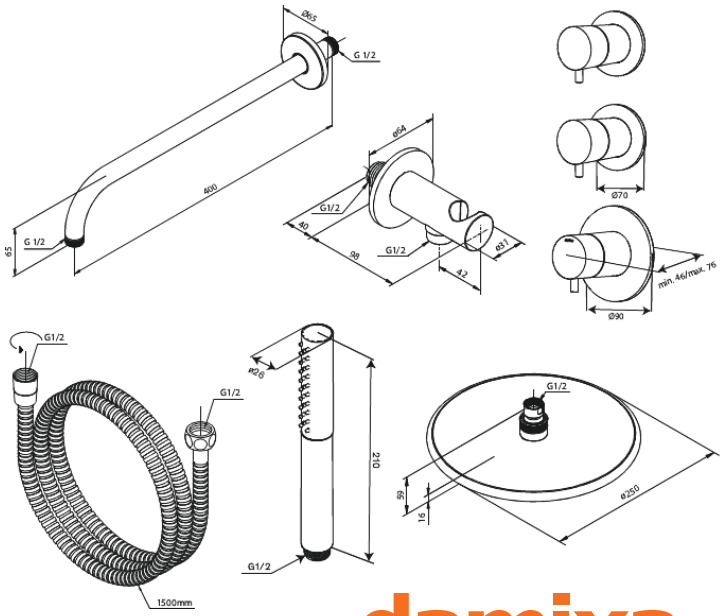

FM Mattsson Denmark ApS
Hvidkærvej 48, 5250 Odense SV, DK-56416218

+45 88 33 00 34 danmark@fmmattssongroup.com

Mere information på damixa.com

damixa