Inner parts bundle - Thermostat + 2 stop cocks

Article no.: 570420000
Finish:
Series:
EAN no.: 5708516840961



Standard features:

Build-in depth (min. 75mm - max. 105mm)

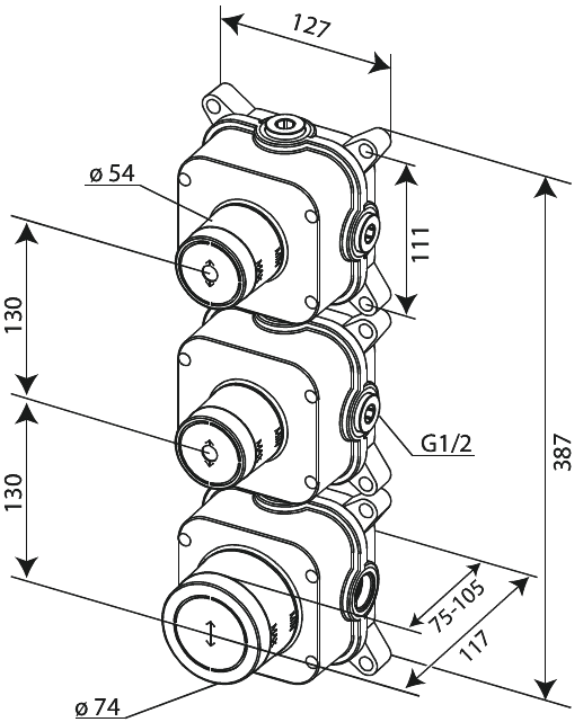

FM Mattsson Denmark ApS
Hvidkærvej 48, 5250 Odense SV, DK-56416218

+45 88 33 00 34 denmark@fmmattssongroup.com

Mere information på damixa.com

damixa