Bath waste - loose item

Article no.:	238806100
Finish:	Matt black
Series:	
EAN no.:	5708516841753



Standard features:

Water consumption max 47 l/min

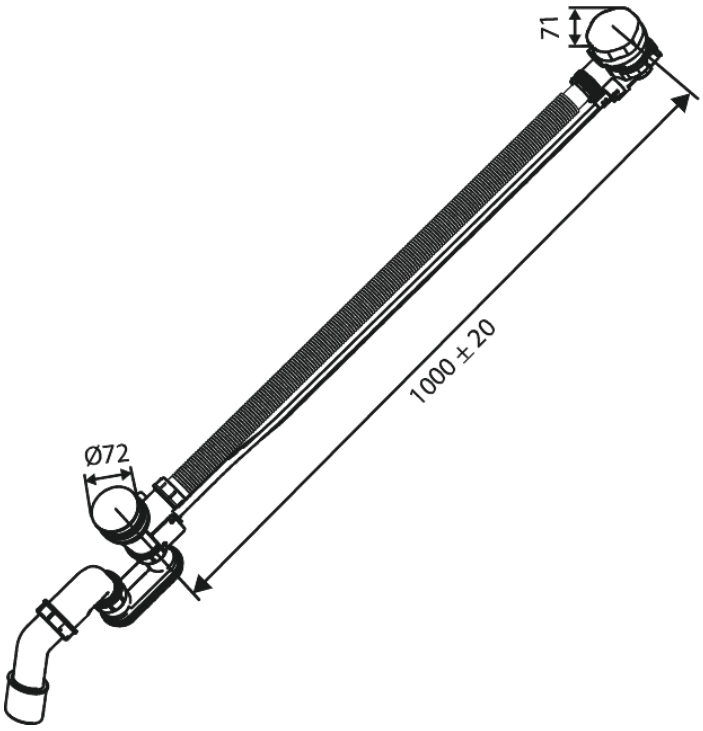

FM Mattsson Denmark ApS
Hvidkærvej 48, 5250 Odense SV, DK-56416218

+45 88 33 00 34 danmark@fmmattssongroup.com

Mere information på damixa.com

damixa