Exposed Kit - Thermostatic

Article no.:	767065500
Finish:	Graphite Grey
Series:	
EAN no.:	5708516837466



Standard features:

Cover plate and handle in metal

Product features

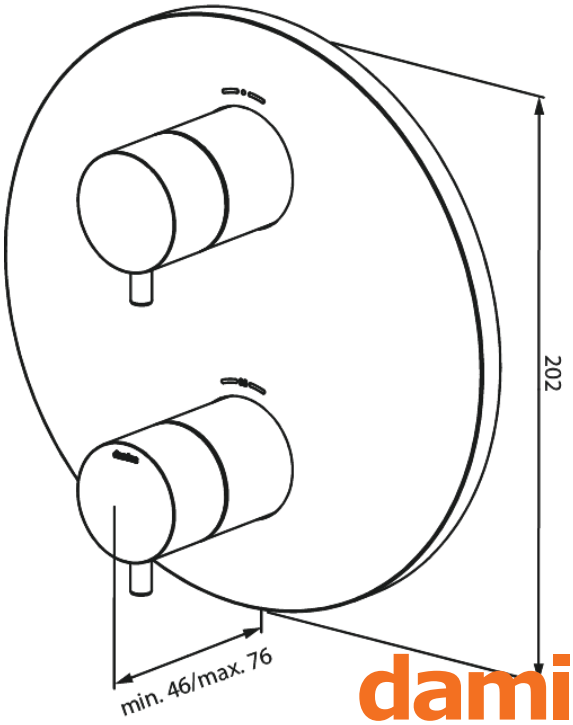

FM Mattsson Denmark ApS
Hvidkærvej 48, 5250 Odense SV, DK-56416218

+45 88 33 00 34 danmark@fmmattssongroup.com

Mere information på damixa.com