Silhouet

Touchless Pro Kitchen Mixer

Article no.:	741622100
Finish:	Matt White
Series:	Silhouet
EAN no.:	5708516832713



Standard features:

120° swivel limitation
Ceramic cartridge
Rub-Clean
Standard installation
8/l min aerator
Sensor
Easy handle regulation of temperature and flow
Small velcro attached battery container
No extra space requirement
Hygienic
Spray function
Flexible hose

Product features

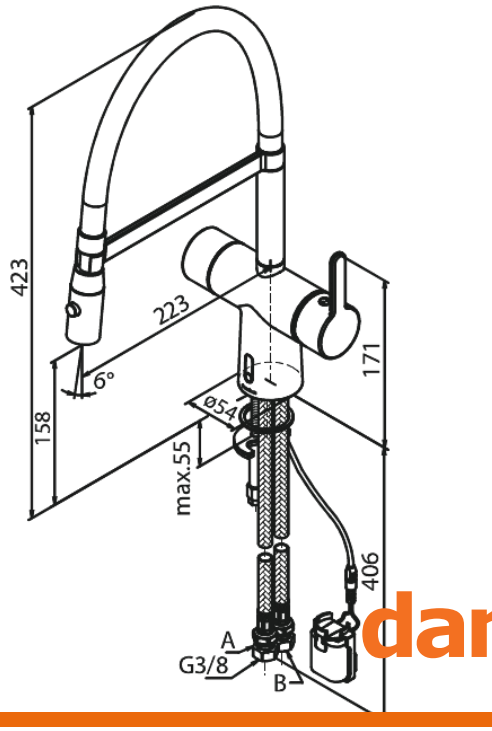

FM Mattsson Denmark ApS
Hvidkærvej 48, 5250 Odense SV, DK-56416218

+45 88 33 00 34 danmark@fmmattssongroup.com

Mere information på damixa.com

damixa