Silhouet

Pro Kitchen Mixer

Article no.:	741282100
Finish:	Matt White
Series:	Silhouet
EAN no.:	5708516832607



Standard features:

120° swivel limitation
Ceramic cartridge
Cold-start
Rub-Clean
Water consumption max.9 l/min
Spray function
Flexible hose

Product features



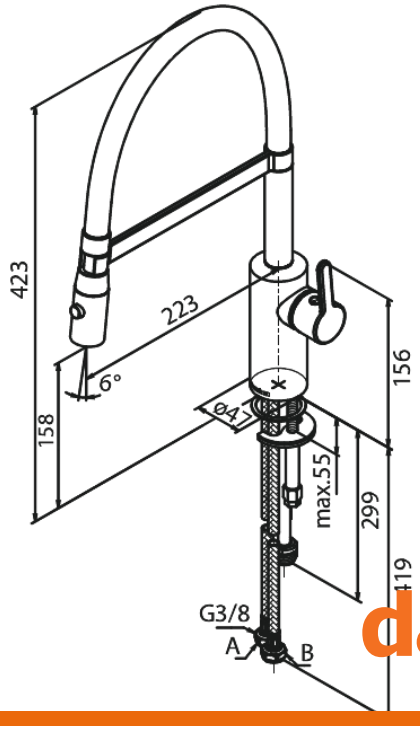

FM Mattsson Denmark ApS
Hvidkærvej 48, 5250 Odense SV, DK-56416218

+45 88 33 00 34 danmark@fmmattssongroup.com

Mere information på damixa.com

damixa