Collection

Soap dispenser

Article no.:	484810000
Finish:	Chrome
Series:	Collection
EAN no.:	5708516833765

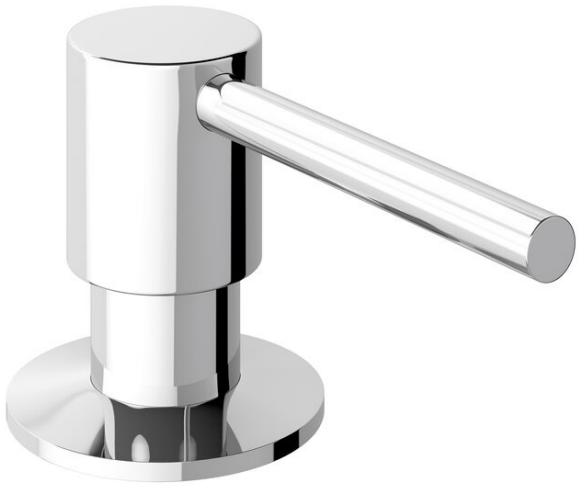

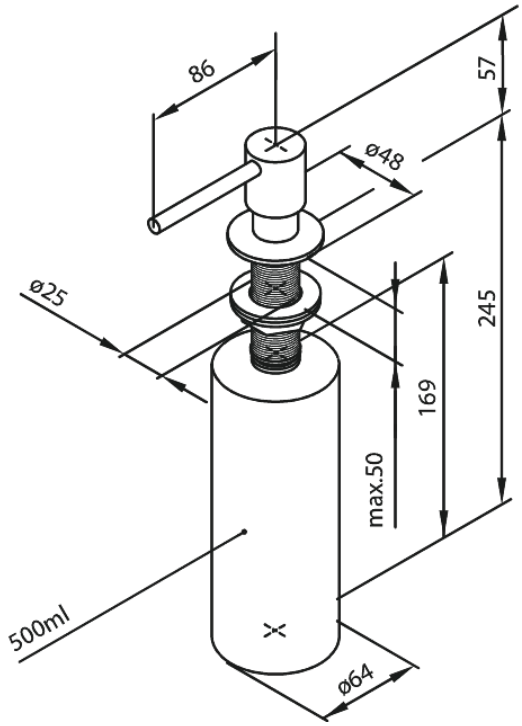

FM Mattsson Denmark ApS
Hvidkærvej 48, 5250 Odense SV, DK-56416218

+45 88 33 00 34 danmark@fmmattssongroup.com

Mere information på damixa.com

damixa