Pine

Medium Basin Mixer

Article no.:	179304600
Finish:	Steel
Series:	Pine
EAN no.:	5708516832812



Standard features:

1 handle
Ceramic cartridge
Rub-Clean
Scalding protection
Water consumption max.6 l/min
Eco-Save water saving feature
Noise class I

Product features



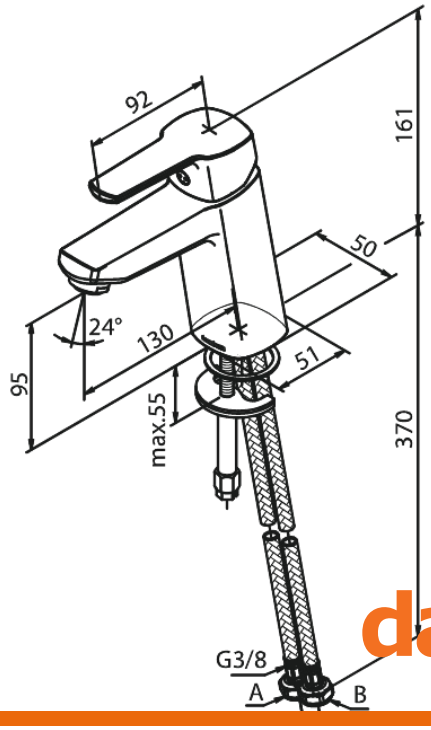

FM Mattsson Denmark ApS
Hvidkærvej 48, 5250 Odense SV, DK-56416218

+45 88 33 00 34 danmark@fmmattssongroup.com

Mere information på damixa.com

damixa