Silhouet

Touchless basin tap

Article no.:	740222100
Finish:	Matt White
Series:	Silhouet
EAN no.:	5708516832201



Standard features:

Ceramic cartridge
Rub-Clean
Standard installation
6l/min aerator
Sensor
Easy handle regulation of temperature and flow
Small velcro attached battery container
No extra space requirement
Hygienic

Product features



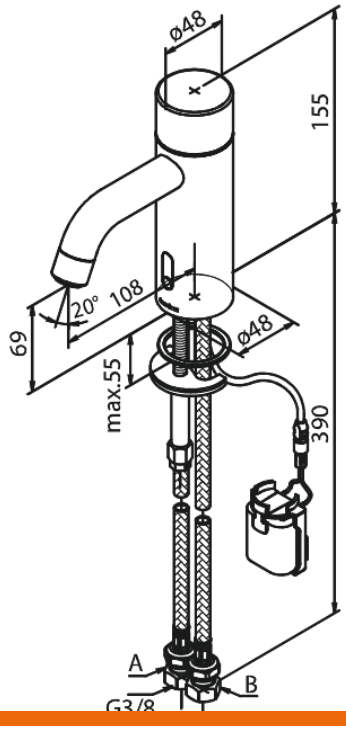

FM Mattsson Denmark ApS
Hvidkærvej 48, 5250 Odense SV, DK-56416218

+45 88 33 00 34 danmark@fmmattssongroup.com

Mere information på damixa.com

damixa