Solid

Shower System

Article no.:	579830000	**EAN no.:**	5708516829751
Finish:	Chrome		
Series:	Solid		

Standard features:

Ceramic cartridge
Head Shower max. 9 l/m / Hand Shower max. 6 l/m
Integrated diverter
Standard 150mm centres
With 3/4" wall plates & eccentric unions
3 spray modes
1500 mm metal hose
Including headshower, handshower and hose

Product features

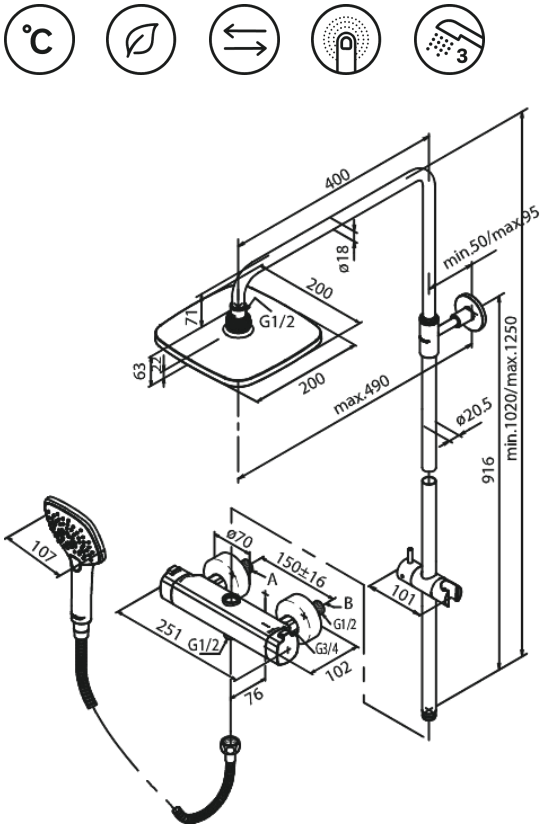

FM Mattsson Denmark ApS
Hvidkærvej 48, 5250 Odense SV, DK-56416218

+45 88 33 00 34 danmark@fmmattssongroup.com

Mere information på damixa.com

damixa