Silhouet

Shower System

Article no.:	579542100	**EAN no.:**	5708516830313
Finish:	Matt White		
Series:	Silhouet		

Standard features:

Adjustable Height
1750 mm metal hose
Integrated diverter
Standard 150mm centres
With 3/4" wall plates & eccentric unions
Including head shower, hand shower and hose
Head Shower max. 9 l/m / Hand Shower max. 9 l/m

Product features

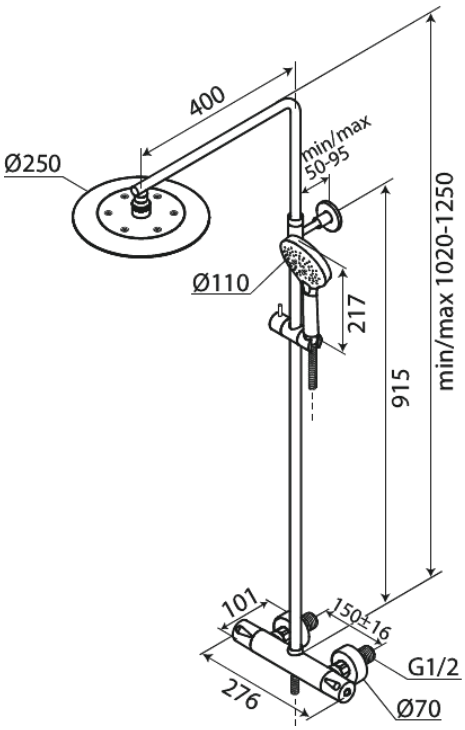

FM Mattsson Denmark ApS
Hvidkærvej 48, 5250 Odense SV, DK-56416218

+45 88 33 00 34 danmark@fmmattssongroup.com

Mere information på damixa.com

damixa