Tradition

Shower System

Article no.:	379307700	**EAN no.:**	5708516824046
Finish:	Polished Brass		
Series:	Tradition		

Standard features:

Head Shower max.13 l/m / Hand Shower max.12 l/m
1750 mm metal hose
Integrated diverter
Standard 150mm centres
With 3/4" wall plates & eccentric unions
Including headshower, handshower and hose

Product features

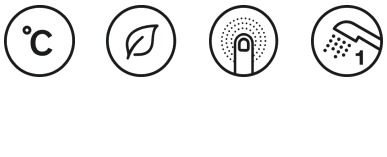

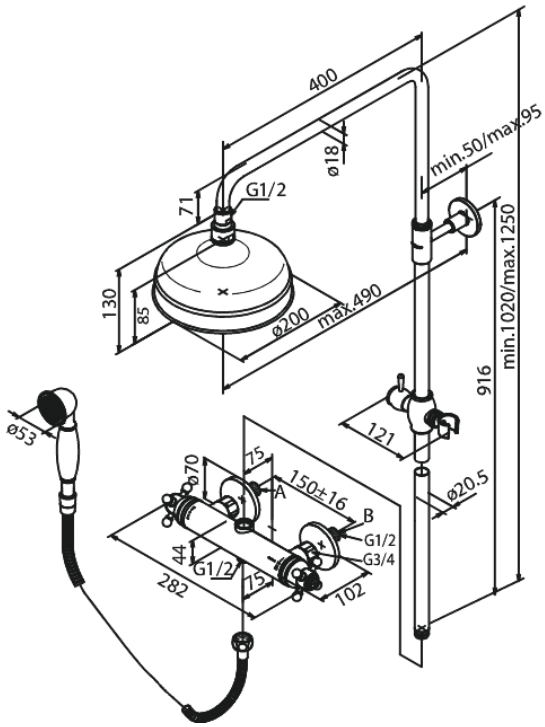

FM Mattsson Denmark ApS
Hvidkærvej 48, 5250 Odense SV, DK-56416218

+45 88 33 00 34 danmark@fmmattssongroup.com

Mere information på damixa.com

damixa