Silhouet

Shower System

Article no.:	579540000
Finish:	Chrome
Series:	Silhouet
EAN no.:	5708516824183



Standard features:

Adjustable Height
1750 mm metal hose
Integrated diverter
Standard 150mm centres
With 3/4" wall plates & eccentric unions
Including head shower, hand shower and hose
Head shower max. 8 l/min / Hand shower max. 8 l/min (at 300 kPa)

Product features



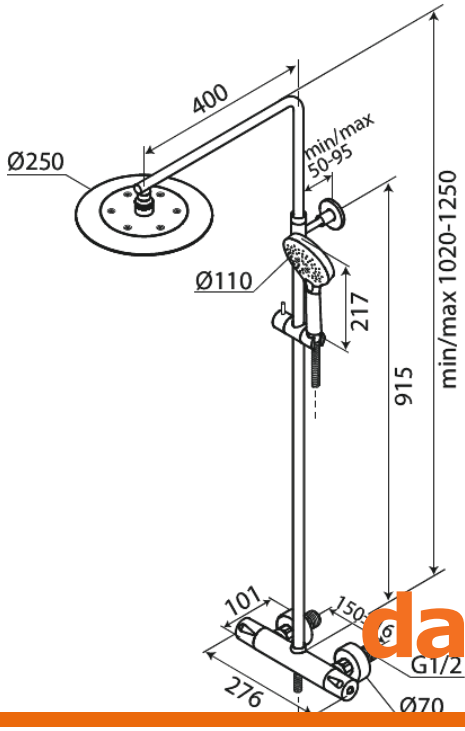

FM Mattsson Denmark ApS
Hvidkærvej 48, 5250 Odense SV, DK-56416218

+45 88 33 00 34 danmark@fmmattssongroup.com

Mere information på damixa.com

damixa