Fern

Kitchen Mixer

Article no.:	680610000	**EAN no.:**	5708516813460
Finish:	Chrome		
Series:	Fern		

Standard features:

1 handle
120° swivel limitation
Ceramic cartridge
Rub-clean aerator
Scalding protection
Eco-Save water saving feature
Twist & Save

Product features

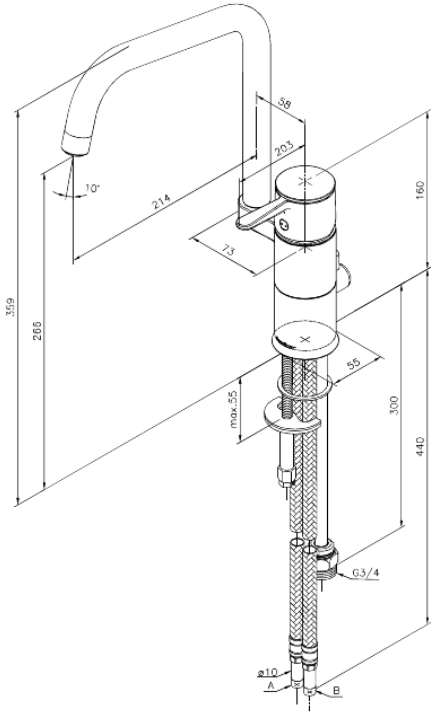

FM Mattsson Denmark ApS
Hvidkærvej 48, 5250 Odense SV, DK-56416218

+45 88 33 00 34 danmark@fmmattssongroup.com

Mere information på damixa.com

damixa