Tradition

Kitchen Mixer

Article no.:	371200000	**EAN no.:**	5708516817512
Finish:	Chrome		
Series:	Tradition		

Standard features:

1 handle
120° swivel limitation
Ceramic cartridge
Cold-start
Rub-clean aerator
Scalding protection
Water consumption max.9 l/min
Eco-Save water saving feature
Dual function spray head

Product features

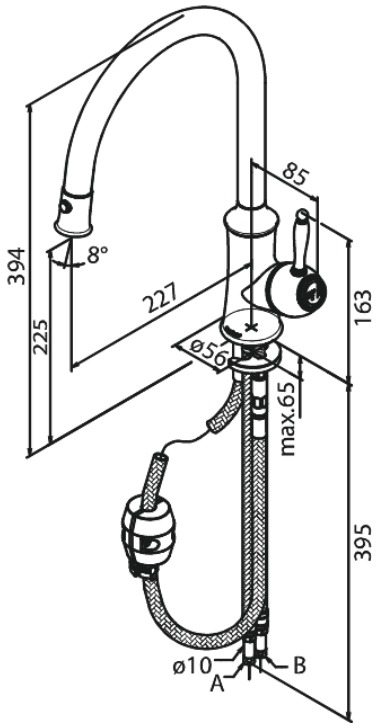

FM Mattsson Denmark ApS
Hvidkærvej 48, 5250 Odense SV, DK-56416218

+45 88 33 00 34 danmark@fmmattssongroup.com

Mere information på damixa.com

damixa