Tradition

Shower Mixer

Article no.:	370210000
Finish:	Chrome
Series:	Tradition
EAN no.:	5708516136248



Standard features:

Water consumption max.19 l/min
Standard 150mm centres
With 3/4" wall plates & eccentric unions
1/2" connection for hand shower hose
Ceramic head part

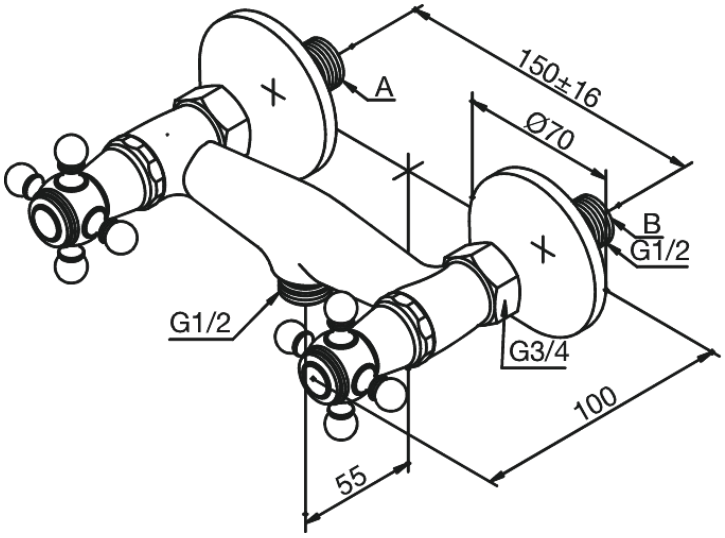

FM Mattsson Denmark ApS
Hvidkærvej 48, 5250 Odense SV, DK-56416218

+45 88 33 00 34 danmark@fmmattssongroup.com

Mere information på damixa.com

damixa