Arc

Shower Mixer

Article no.:	292000000
Finish:	Chrome
Series:	Arc
EAN no.:	5708516726838



Standard features:

Ceramic cartridge
Scalding protection
Water consumption max.20 l/min
Noise class I
Standard 150mm centres
Eco-Click water saving feature
With 3/4" wall plates & eccentric unions
1/2" connection for hand shower hose

Product features

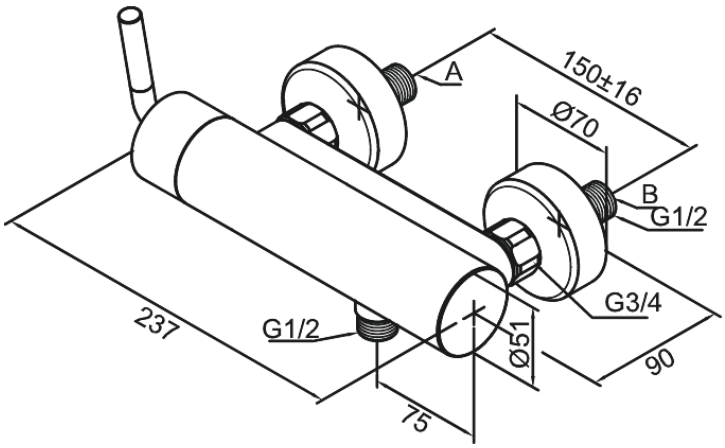

FM Mattsson Denmark ApS
Hvidkærvej 48, 5250 Odense SV, DK-56416218

+45 88 33 00 34 danmark@fmmattssongroup.com

Mere information på damixa.com

damixa