Pine

Basin Mixer with pop up waste

Article no.:	178220000	**EAN no.:**	5708516836704
Finish:	Chrome		
Series:	Pine		

Standard features:

1 handle
Ceramic cartridge
Cold-start
Rub-Clean
Scalding protection (38ºC)
Water consumption max.6 l/min
Eco-Save water saving feature
6l/min aerator
Pop up waste

Product features

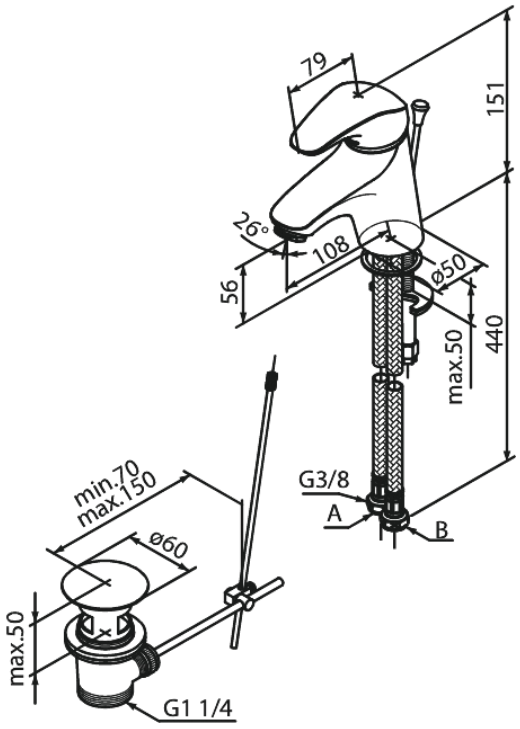

FM Mattsson Denmark ApS
Hvidkærvej 48, 5250 Odense SV, DK-56416218

+45 88 33 00 34 damixa-international@fmmattssongroup.com

Mere information på damixa.com

damixa