Iris

XS 2

Article no.:	570644600	**EAN no.:**	5708516849605
Finish:	Steel		
Series:	Iris		

Standard features:

Cover plate and handle in metal
1500 mm shower hose
Head shower 30 cm
Hand shower with 3 spray modes
Outlet elbow with flexible shower holder
Shower arm ceiling mounted 15 cm
Head shower 8 l/m / Hand shower 6 l/m

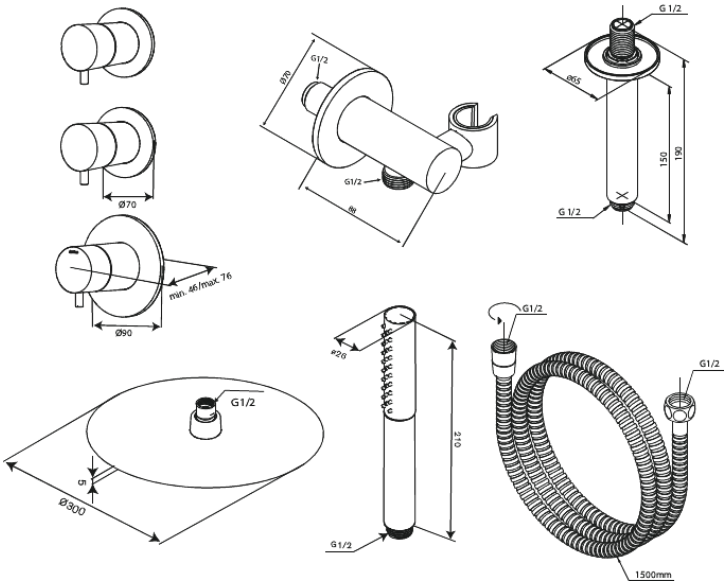

FM Mattsson Denmark ApS
Hvidkærvej 48, 5250 Odense SV, DK-56416218

+45 88 33 00 34 danmark@fmmattssongroup.com

Mere information på damixa.com

damixa