Iris

XS 2

Article no.:	570640000	**EAN no.:**	5708516849599
Finish:	Chrome		
Series:	Iris		

Standard features:

Cover plate and handle in metal
1500 mm shower hose
Head shower 30 cm
Hand shower with 3 spray modes
Outlet elbow with flexible shower holder
Shower arm ceiling mounted 15 cm

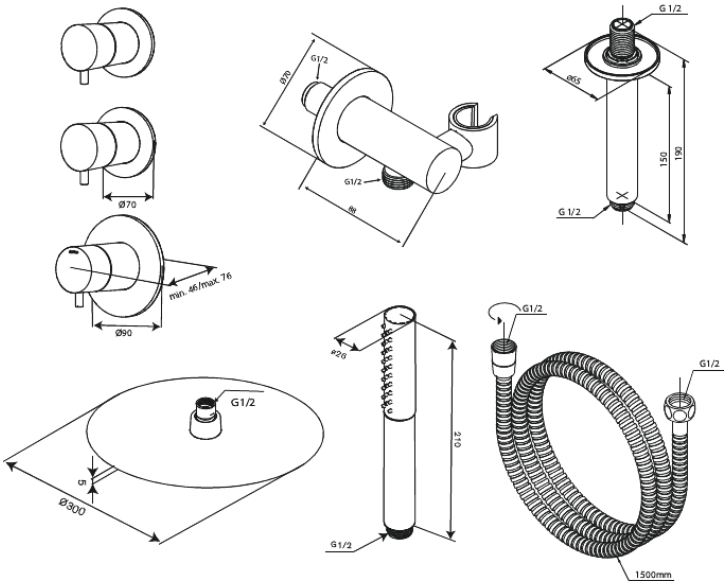

FM Mattsson Denmark ApS
Hvidkærvej 48, 5250 Odense SV, DK-56416218

+45 88 33 00 34 danmark@fmmattssongroup.com

Mere information på damixa.com

damixa