Concealed

Silhouet XS 2

Article no.:	570447700	**EAN no.:**	5708516841166
Finish:	Polished Brass		
Series:	Concealed		

Standard features:

Cover plate and handle in metal
Including head shower, hand shower and hose
Head Shower max. 9 l/m / Hand Shower max. 9 l/m

Product features

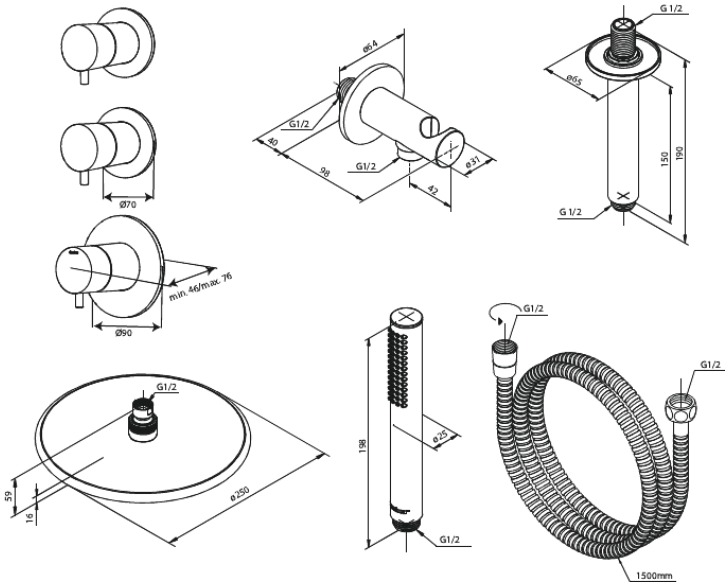

FM Mattsson Denmark ApS
Hvidkærvej 48, 5250 Odense SV, DK-56416218

+45 88 33 00 34 danmark@fmmattssongroup.com

Mere information på damixa.com

damixa