Tradition

Shower Head

Article no.:	372217700	**EAN no.:**	5708516824060
Finish:	Polished Brass PVD		
Series:	Tradition		

Standard features:

Water consumption max. 13 l
Ø200mm

Product features

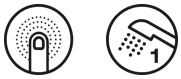

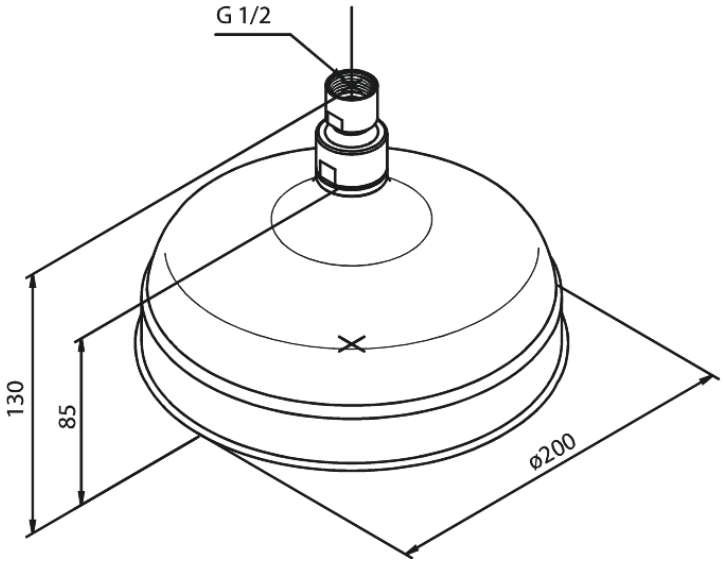

FM Mattsson Denmark ApS
Hvidkærvej 48, 5250 Odense SV, DK-56416218

+45 88 33 00 34 damixa-international@fmmattssongroup.com

Mere information på damixa.com

damixa