Clover Green

Plus

Article no.:	765070000	**EAN no.:**	5708516710646
Finish:	Chrome		
Series:	Clover Green		

Standard features:

Rub-Clean
Water consumption max.9 l/min
Eco-Save water saving feature
1500 mm plastic hose
Incl. Soap dish & Glider
3 spray modes

Product features

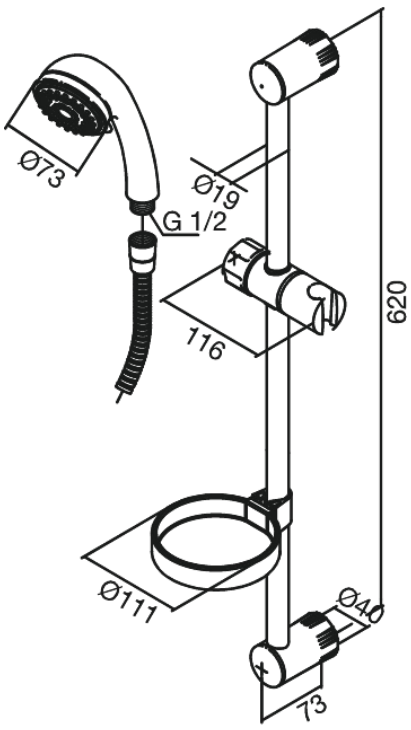

FM Mattsson Denmark ApS
Hvidkærvej 48, 5250 Odense SV, DK-56416218

+45 88 33 00 34 damixa-international@fmmattssongroup.com

Mere information på damixa.com

damixa